ULPN-355-10-1-10-M

Ultraviolet Pulsed Fiber Laser Module

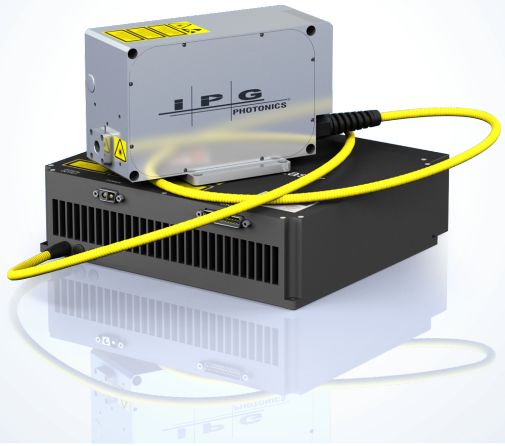

Applications

- Materials Processing
- Micromachining
- Solar/ Photovoltaic
- Plastics Marking
- Texturing
- Si Ablation
- Scribing

Features

- Wavelength 355 nm
- Pulse Energy 10 µJ
- Pulse Duration 1.2 ns
- Peak Power 10 kW
- Beam Quality M^2<1.5
- Repetition Rate up to 1 MHz
- Record Wall-plug Efficiency
- Air-cooled
- Rugged Design

IPG Photonics' NEW ULPN-M Series ultraviolet nanosecond fiber lasers provide high peak power with scalable average output power up to 10 W, 1 ns pulse duration at full operational repetition rate range of 10-1000 kHz. The all fiber format allows for the adjustment of pulse energy and/or pulse repetition rate without affecting any of the output beam parameters. IPG's novel fiber laser is much more efficient and compact than conventional lasers now on the market, and is ideal for applications in the solar/photovoltaic arena, resistor trimming and marking of transparent materials. The short wavelength, short pulse duration and high peak power result in very small heat affected zone.

ULPN-355-10-1-10-M

Ultraviolet Pulsed Fiber Laser Module

Optical Characteristics

Wavelength, nm	355
Average Power, W	5
Pulse Energy, µJ	10
Pulse Duration, ns	1.2
Peak Power, kW	up to 10
Repetition Rate, kHz	10-1000
Beam Quality, M^2	<1.5

General Characteristics

Module Dimensions (W × D × H), mm	270 × 220 × 86
Optical Head Dimensions (W × D × H), mm	140 × 254 × 97
Cooling	Air-cooled
Supply Voltage, VDC	24
Power Consumption, W	70

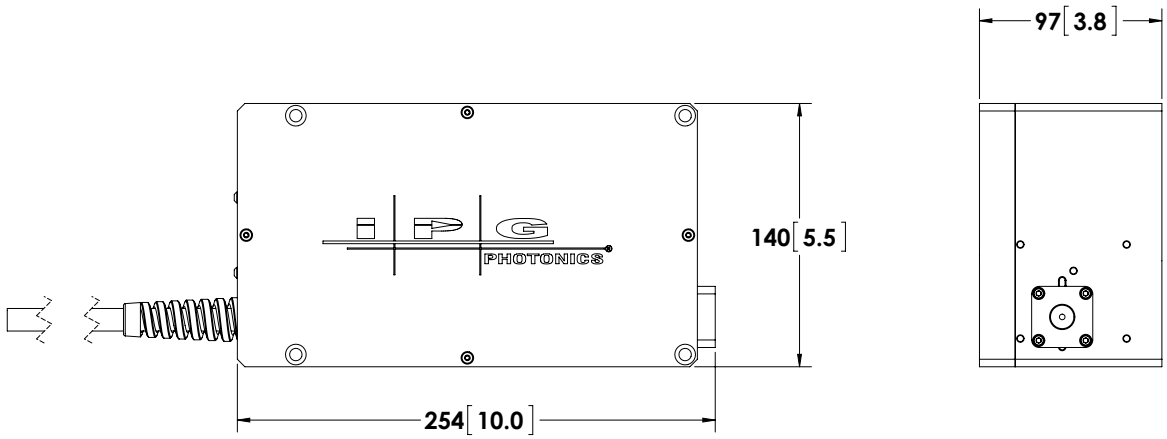

+1 (508) 373-1100
sales.us@ipgphotonics.com
www.ipgphotonics.com

MAX. AVERAGE OUTPUT POWER: 10 W
MAX. PEAK OUTPUT POWER: 20 kW
PULSE DURATION: 1.2 ns
PULSE REPETITION RATE: 10-500 kHz
WAVELENGTH RANGE: 340-1080 nm

DANGER - INVISIBLE LASER RADIATION AVOID EYE OR SKIN EXPOSURE TO DIRECT OR SCATTERED RADIATION CLASS 4 LASER PRODUCT

IEC 60825-1:2014

Legal notices: All product information is believed to be accurate and is subject to change without notice. Information contained herein shall legally bind IPG only if it is specifically incorporated into the terms and conditions of a sales agreement. Some specific combinations of options may not be available. The user assumes all risks and liability whatsoever in connection with use of a product or its application. IPG, IPG Photonics, The Power to Transform and IPG Photonics' logo are trademarks of IPG Photonics Corporation. © 2020 IPG Photonics Corporation. **All rights reserved.**

The Power to Transform®